ANTUNES www.antunes.com 180 Kehoe Blvd., Carol Stream, Illinois 60188

TAC-01 SYSTEM (P/N 9700903)

PARTS INCLUDED:

1 - Bracket, Filter Std. Housing w/ screws (P/N 0505639)
1 - Housing, Bowl, and Head (P/N 2180258)
1 - Wrench, Filter (P/N 2180244)
1 - Tee 3/4" NPT (P/N 2190184)
1 - Nipple, Hex 3/4" NPT x 1-1/2" LG (P/N 2070117)
1 - TAC-01 Cartridge (P/N 7000708)
1 - Instruction Sheet (P/N 1011013)

TOOLS:

- *Mounting Hardware (Not Provided)*
- *Drill with bits*
- *Tape Measure*
- *Pipe Wrenches*
- *Adjustable Wrenches*
- *Level*
- *Pipe Dope, Thread Seal Tape, or Thread Sealing Cord*
- *Screwdriver (Flat Blade and Phillips)*
- *Two Gallon Bucket*
- *Fresh 6% unscented liquid chlorine bleach*

General

If you experience any problems with these instructions, or if any parts are damaged or missing, contact Antunes Technical Service at +1-877-392-7854 toll free.

The TAC System improves the quality of water by addressing scale issues on hot water applications. It should be installed upstream of equipment using hot water.

CAUTION

Do not use this system with water that is microbiologically unsafe or of unknown quality without adequate disinfection installed before or after the system.

Equipment Setup

When installing the system, pay attention to the following guidelines:

- Do not install above electrical equipment.
- Allow space below the TAC Housing for TAC Cartridge replacement.

PLUMBING

NOTE: This system is designed to be used on tap water not to exceed 100°F (38°C) or 100 psig (690 kPa). The kit must be connected to the COLD water line. Do not connect the kit to the hot water line.

The TAC System has the following connections:

- Inlet 3/4" NPT
- Outlet 3/4" NPT

When making a plumbing connection to the System, use a back-up wrench on the supporting plumbing. Always use a quality, approved pipe sealant or thread seal tape on the pipe threads. Be careful not to get the pipe sealant inside the pipe when making connections.

DO NOT over tighten the connections. The use of plastic fittings when connecting to the plastic head will reduce the possibility of cracking the head due to over tightening.

If soldered plumbing is used, do not apply heat to, or near, the Head. The use of union (o-ring seal) connections is highly recommended for ease of installation and future servicing.

CAUTION

This equipment must be installed to comply with the basic plumbing code of the Building Officials and Code Administrators, Inc. (BOCA) and the Food Service Sanitation Manual of the Food and Drug Administration (FDA).

CAUTION

Water pressure must not exceed 100 psig. To reduce water pressure, install a water pressure regulator and set the water pressure to below 100 psig.

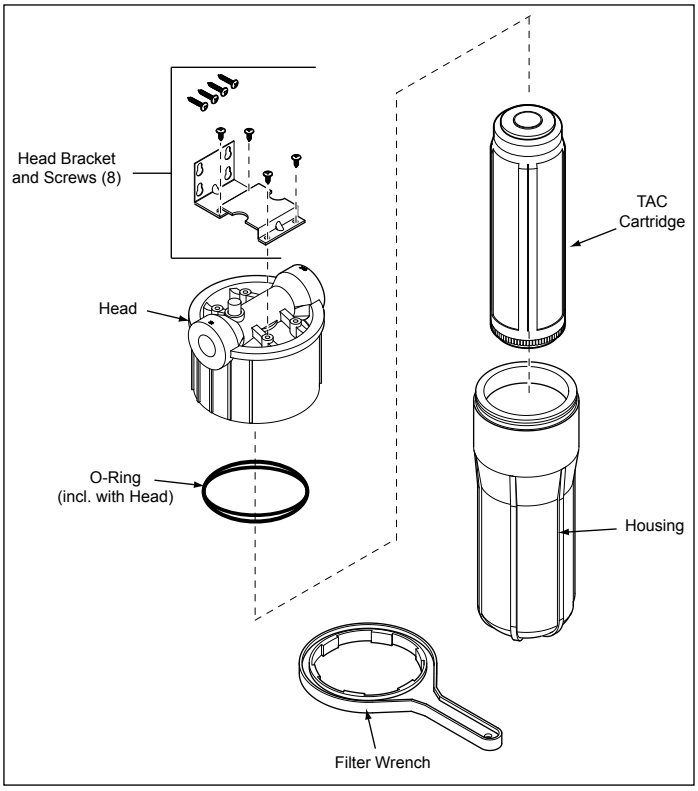

Figure 1. TAC-01 System

TAC-01 SYSTEM (P/N 9700903)

INLET WATER PLUMBING

The plumbing leading to the TAC System must be flushed clear of all debris before connecting to the inlet connection of a water system. Hold a bucket at the inlet water line and slowly open the inlet water valve. Allow the pipe to flush until all debris is removed.

MOUNTING THE SYSTEM

Before mounting the TAC System, please consider the items listed below:

- The Housing must be mounted with sufficient access for element replacement. The Housing is 14 inches tall. An additional 2 inches should be allowed below the bowl to allow proper access when changing elements.
- The kit must be mounted with hardware capable of supporting 10 lbs or more of weight.
- The mounting bracket supplied with the system must be mounted in the UP position (See Figure 2). The bracket comes with short screws for attaching to the head and long screws for attaching the bracket to the wall.

NOTE: Only the short screws should be used for mounting the Head to the Bracket.

- The Head can be mounted with the inlet on the left or on the right. When the inlet is on the left, the red pressure relief button is on the left. Refer to Figure 2 for help in locating the Inlet and Outlet ports.
- The TAC System must be installed upstream of all equipment using hot water.
- The inlet water should only be connected to the “INLET” port on the Head. The filtered water should only be connected to the “OUTLET” port on the Head. See Figure 2.

Attach the mounting bracket to the Head **BEFORE** attaching to the wall.

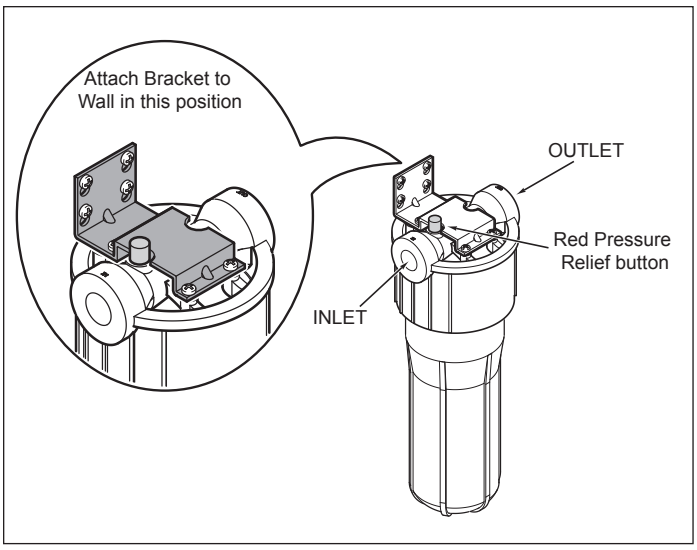

Figure 2. Mounting Bracket (Up Position ONLY)

ATTACHING TO THE INLET

Both the Inlet and Outlet connections have a 3/4” NPT female thread. Be careful not to overtighten a fitting into the Head. Plastic fittings are recommended for connecting to the Head. Use a pipe thread sealant approved for use in drinking water applications with plastic fittings.

Sanitizing the System and Lines

CAUTION

DO NOT **connect the Inlet water to the Outlet port on the head.**

The plumbing must be sanitized to eliminate possible contamination that may have occurred during the installation process.

Liquid chlorine bleach (regular bleach, unscented 6% sodium hypochlorite) can be used to sanitize the plumbing. The amount of bleach to use depends on the system installed and the amount of plumbing downstream of the TAC System. Generally 10 drops (one-half ml) of bleach is sufficient to sanitize the bowl and associated plumbing.

NOTE: When sanitizing the TAC System, make sure the TAC cartridge is not installed or is removed from the housing before sanitizing.

CAUTION

Make sure the follow any handling or safety instructions supplied with the bleach.

1. Direct the water line from the outlet of the Head to a drain.
2. Unscrew the Housing counter clockwise to remove the Housing from the Head.
3. Pour the liquid chlorine bleach into the bowl.
4. Screw the Housing (containing the bleach) into the Head. Tighten the bowl until it stops. The Housing will come to a hard stop at the end of the thread. Use the filter wrench if necessary. Do not overtighten the housing.
5. Slowly turn on the water supply and pressurize the system. Allow water to flow out of the Housing until the odor of bleach is present.
6. Turn off the water supply and let the system stand without water flow for at least 15 minutes to allow the bleach to sanitize the pipes.
7. After 15 minutes without water flow, turn on the water supply and flush until the presence of bleach is gone.
8. Shut off the water supply and depressurize the system.

NOTE: Refer to document 1011012, provided with this system, for instructions on replacing and rinsing the TAC Cartridge.