Antunes
EXPECT SUCCESS

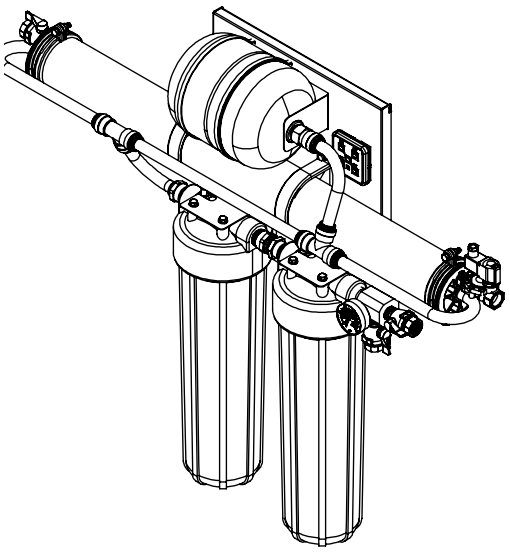

VZN-521H **VZN-521HC** **VZN-521H-T5** **VZN-521HC-T5**

VZN-541H **VZN-541HC** **VZN-541H-T5** **VZN-541HC-T5**

VZN-541V **VZN-541VC** **VZN-541V-T5** **VZN-541VC-T5**

VZN-541VE

Water Filtration

Owner's Manual

Original Instructions

Manufacturing Numbers:

9710104, 9710105, 9710106, 9710107, 9710111,
9710113, 9710114, 9710115, 9710116, 9710117,
9710118, 9710119, 9710120, 9710128, 9710132

NSF

System Tested and Certified by NSF International against NSF/ANSI Standard 42 and 53 for the reduction of:

Standard No. 42: Aesthetic Effects

Nominal Particulate Reduction Class I
Chlorine Reduction (VZN-541VE ONLY)

Standard No. 53: Health Effects
Cyst Reduction & Turbidity Reduction as verified and substantiated by test data.

CAUTION: Read all instructions before using the unit.

P/N 1013008 Rev E 06/20

Contents

Introduction **2**
Before Use 2
In Case of Damage 2
Service/Technical Assistance **2**
Safety Information **3**
Installation 3
Operation 3
Maintenance 3
Service 3
Safety Information (Continued) 4
Specifications **5**
Performance Data Sheet **6**
Filter Cartridge Capacities 6
Performance Claims for % Reduction 6
Overview **7**
Manual Flushing 7
Unpacking **8**
Equipment Setup **8**
General 8
Electrical 8
Plumbing 8
Suggested Tools and Supplies for Install 8
Installation **9**
Mounting the System 9
Drain Valve Connection 10
Rinse Valve Connection 11
System Inlet Connection 11
Filtered Water Permeate Outlet Connection 11
Inlet Water Plumbing 11
Installing a Bypass 12
Starting the Controller 12
Rinsing the Ultra Filter Cartridge 12
Sanitizing the System and Lines 13
Rinsing the Carbon Element/TAC Cartridge 13
Maintenance **14**
Replacing the Ultra Filter Cartridge 14
Replacing the Carbon Element 15
Replacing the TAC Cartridge 16
System Sanitization 16
Changing the Interval Setting 17
Resetting the Timer Program 17
Semi-Annual Task **17**
Check Permeate Tank Air Pre-Charge 17
Troubleshooting **18**
Replacement Parts **19**
Parts List 19
Exploded View 1 **20**
Exploded View 2 **21**
Notes **22**
Limited Warranty **23**

Introduction

The VZN system is an innovative filtration system that uses proprietary multi-bore hollow fiber membranes as well as a carbon element to provide the latest innovation in filtration technology.

Before Use

This manual provides the safety, installation, and operating procedures for the VZN water filtration system. All information contained in this manual should be read prior to installing and operating the system. Your VZN system is manufactured from the finest materials available and is assembled to strict quality standards. This system has been tested at the factory to ensure dependable trouble-free operation.

In Case of Damage

If the unit arrives damaged, file a claim with the carrier immediately. Save all packing materials when filing a claim. Freight damage claims are the responsibility of the purchaser and are not covered under warranty.

IMPORTANT

Antunes reserves the right to change specifications and product design without notice. Such revisions DO NOT entitle the buyer to corresponding changes, improvements, additions or replacements for previously purchased equipment.

IMPORTANT

Keep these instructions for future reference. If the system changes ownership, be sure this manual accompanies the equipment.

Service/Technical Assistance

If there are any problems with the installation or operation of the unit, contact Antunes Technical Service at +1-877-392-7854 (toll free).

Fill in this information and have it handy when calling for assistance. The serial number is on the specification plate located on the unit.

_____
Purchased from

_____
Date of purchase

_____
Model number

_____
Serial number

_____
Manufacturing number

Suggested replacement period for the Ultra Filter Cartridge is approximately 5-7 years (dependent on water quality).

For sales in the state of Iowa:

_____
Seller

_____
Date

_____
Buyer

_____
Date

Safety Information

Installation

- Read and understand all instructions before installing or using the unit.
- Install and locate the equipment only for its intended use as described in this manual.
- This equipment is to be installed to comply with the local plumbing code and any other applicable code.
- This equipment should be supplied with only cold water.
- Water pressure must not exceed 100 psig (690 kPa). To reduce water pressure, install a water pressure regulator and set to suit the application.
- The trans membrane pressure (inlet pressure minus the permeate water pressure) must not exceed 45 psi (310 kPa).
- A ground fault circuit interrupter (GFCI) must be installed on the circuit to this system.
- When installed on metallic plumbing, a properly sized electrical bonding jumper must be installed across the inlet and outlet pipes serving this unit.
- For installations in Massachusetts, the Commonwealth of Massachusetts Plumbing Code 248 CMR shall be adhered to. The use of saddle valves are not permitted. Please consult your local plumber.

NOTE: If the inlet water pressure is less than 50 psig (345 kPa), it is recommended that a suitably-sized booster system (outlet pressure 60 psig - 100 psig max (414 kPa - 690 kPa max) be installed.

WARNING

ELECTRICAL SHOCK HAZARD. Failure to follow the instructions in this manual could result in serious injury or death.

DO NOT modify the power supply cord plug. If it does not fit the outlet, have a proper outlet installed by a qualified electrician.

DO NOT use an extension cord with this unit.

If the supply cord is damaged, it must be replaced by the manufacturer, its service agent, or a similarly qualified person.

All electrical connections must be in accordance with local electrical codes and any other applicable codes.

Operation

- DO NOT operate the unit if it has been damaged or dropped, if it has a damaged cord or plug, or if it is not working properly.
- DO NOT block or cover any openings on the equipment.
- DO NOT immerse the cord, unit, or power plug in water.
- Keep the cord away from heated surfaces.

Maintenance

- DO NOT use corrosive chemicals in this equipment.
- DO NOT clean the unit with a water jet or steam cleaner.

Service

- Unplug the power cord before performing any service or maintenance on the unit.
- If the supply cord is damaged, it must be replaced by the manufacturer, its service agent, or a similarly qualified person in order to avoid an electrical hazard.
- This equipment should be serviced by qualified personnel only. Contact Antunes for repair.

Safety Information (Continued)

Protect from becoming dry

If the membrane dries out, irreversible damage to the Ultra Filter membrane may result. Protect the filter from becoming dry by keeping it wet and sealed at all times.

Protect from freezing

If the Ultra Filter membrane freezes during operation or storage, irreversible damage to the membrane and brittle cracking of the cartridge or housing may result.

Protect from direct sunlight or other UV sources

Avoid long-term exposure to direct sunlight or other UV sources. The Ultra Filter should be stored in a dark location.

Protect from high temperatures or abrupt variation in temperature

The maximum operating temperature is 100°F (38°C). Avoid abrupt variations in temperature. Any temperature variation should be made slowly.

Protect from rough handling or dropping

Mechanical damage, external breakage, and/or internal breakage of the filter can result if the system is dropped or bumped. Handle with care at all times during transportation and installation.

Protect from organic solvents and concentrated acids

Prevent any and all contact of the membrane with strong solvents, solvents containing chlorine, or concentrated acids. DO NOT use strong solvents or concentrated acids on any plastic parts of the filter system. Examples of some solvents to avoid: acetone, methyl acetate (nail polish remover); hexane (spot removers); turpentine, toluene (paint thinners); dry cleaning solutions, insecticides.

Protect from abrasive material

The membranes must be protected from abrasive materials like shavings left in a pipe. Abrasive materials in contact with the membrane can cause irreversible damage to the membrane. All pipes must be flushed clean before installing the filter. All plastic parts of the filter system must be protected from sharp objects like knives, sand paper, or other tools. Cutting or nicking a plastic part can weaken it and cause a leak. DO NOT use abrasive cleansers on any plastic parts.

Protect from water hammer

The system must be protected from shock, pressure surges, or pulsation that may occur inside water pipes. Water hammer occurs in pipes when a valve or faucet shuts quickly. Install a water hammer arrestor (pressure vessel containing compressed air separated from the water by a diaphragm) to reduce pressure shock.

⚠ Caution ⚠

This equipment is to be installed to comply with the basic plumbing code of the Building Officials and Code Administrators, Inc. (BOCA) and the Food Service Sanitation Manual of the Food and Drug Administration (FDA).

⚠ Caution ⚠

Water Flow Regulator Assemblies are NOT interchangeable. Operating the system with the wrong Water Flow Regulator or without a regulator can damage the system, cause personal injury, and voids the warranty!

⚠ Caution ⚠

All electrical connections must be in accordance with local electrical codes and any other applicable codes.

A ground fault circuit interrupter (GFCI) must be installed on the circuit to this system.

When installed on metallic plumbing, a properly sized electrical bonding jumper must be installed across the inlet and outlet pipes serving this unit.

Specifications

	System Dimensions		
Model	**Width (A)**	**Depth (B)**	**Height (C)**
VZN-521H VZN-521HC	31" (79 cm)	9" (23 cm)	39" (99 cm)
VZN-521H-T5 VZN-521HC-T5	33" (84 cm)		
VZN-541H VZN-541HC	50" (127 cm)	9" (23 cm)	39" (99 cm)
VZN-541H-T5 VZN-541HC-T5	50" (127 cm)		
VZN-541V VZN-541VC VZN-541VE	24" (64 cm)	9" (23 cm)	50" (127 cm)
VZN-541V-T5 VZN-541VC-T5	36" (91 cm)		

Model	Drain must accommodate flow up to:
VZN-521H VZN-521H-T5 VZN-521HC VZN-521HC-T5 VZN-541VE	8 gpm
VZN-541H VZN-541HC VZN-541H-T5 VZN-541HC-T5 VZN-541V VZN-541VC VZN-541V-T5 VZN-541VC-T5	15 gpm

	Replacement Cartridges		
Model	**Ultrafilter**	**Carbon**	**TAC**
VZN-521H	7001917 L-420	7001909	----------
VZN-521H-T5	7001917 L-420	7001909	7001912
VZN-521HC	7001917 L-420	7001910	----------
VZN-521HC-T5	7001917 L-420	7001910	7001912
VZN-541H	7001916 L-440	7001909	----------
VZN-541HC	7001916 L-440	7001910	----------
VZN-541H-T5	7001916 L-440	7001909	7001912
VZN-541HC-T5	7001916 L-440	7001910	7001912
VZN-541V	7001916 L-440	7001909	----------
VZN-541VC	7001916 L-440	7001910	----------
VZN-541VE	7001916 L-440	7001911	----------
VZN-541V-T5	7001916 L-440	7001909	7001912
VZN-541VC-T5	7001916 L-440	7001910	7001912

Electrical Ratings			
Volts	**Watts**	**Amps**	**Hertz**
100-240	**10**	**.08**	**50/60**

Electrical Cord & Plug Configurations

Kit Model Number/ Description	Configuration
Kit 0012146 DC Power Supply 100 - 240 VAC (Includes the 4 plug adaptors below)	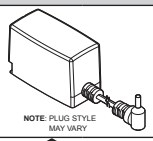
US NEMA 1-15 (2 pin) or NEMA 5-15 (3 Pin)	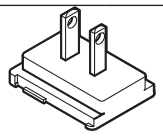
Euro CEE 7/16	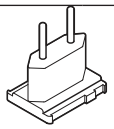
AS/NZS 3112 AUS (2 Pin)	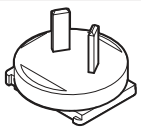
UK BS 1363	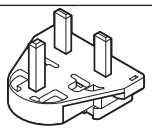

NOTE: ***Includes plug adaptors for US, Europe, Australia, and UK.***

Performance Data Sheet

Filter Cartridge Capacities

Maximum Operating Pressure	100 psig (690 kPa)
Maximum Operating Temperature	100°F (38°C)
Minimum Operating Temperature	40°F (4°C)
Maximum Trans Membrane Pressure	45 PSI (3.1 Bar)
pH Range	3-10
MWCO	100 kD
NSF Certified Rated Service Flow:	
VZN-541VE	7.7 gpm (29 l/m)
VZN-521H, VZN-521HC, VZN-521H-T5, VZN-521HC-T5	7.9 gpm (30 l/m)
VZN-541V, VZN-541VC, VZN-541V-T5, VZN-541VC-T5, VZN-541H, VZN-541HC, VZN-541H-T5, VZN-541HC-T5	13 gpm (49 l/m)
NSF Certified Rated Capacity for Chlorine Reduction:	
VZN-541VE	255,000 gal (965,175 l)

NSF

System Tested and Certified by NSF International against NSF/ANSI Standard 42 and 53 for the reduction of:

Standard No. 42: Aesthetic Effects
Nominal Particulate Reduction Class I
Chlorine Reduction (VZN-541VE only)

Standard No. 53: Health Effects
Cyst Reduction & Turbidity Reduction
as verified and substantiated by test data.

This system has been tested according to NSF/ANSI Standard 42 and 53 for reduction of the substances listed below. The concentration of the indicated substances in water entering the system was reduced to a concentration less than or equal to the permissible limit for water leaving the system, as specified in NSF/ANSI 42 or 53. While testing was performed under standard laboratory conditions, actual performance may vary.

DO NOT use with water that is microbiologically unsafe or of unknown quality without adequate disinfection before or after the system. Systems certified for cyst reduction may be used on disinfected waters that may contain filterable cysts.

Performance Claims for Percent Reduction

Substance	Influent Challenge Concentration	Reduction Requirement	Minimum % Reduction
cyst[1]	Minimum 50,000/L	99.95%	99.95%
Turbidity	11 ± 1 NTU	≤ 0.5 NTU	99.1%
Particulate Class I Particles 0.5 to < 1μm	At least 10,000 particles /mL	≥ 85%	99.5%

[1]based on the use of microspheres or *Cryptosporium parvum* oocysts

NOTE: The NSF information provided applies to the Ultra Filter cartridge.

Substance	Influent Challenge Concentration	Reduction Requirement	Minimum % Reduction
Chlorine	2.0mg/L ± 10%	≥ 50%	95.6%

NOTE: The NSF information for Chlorine Reduction applies to VZN-541VE ONLY.

Overview

The VZN system operates in two modes:

- Normal Operation Mode
- Flush Mode

During Normal Operation Mode, water enters the Inlet and flows through the Ultra Filter before exiting the Permeate Outlet as usable product water.

During Flush Mode, the Drain Valve opens and water entering the Inlet flushes and cleans the Ultra Filter membrane by removing any debris collecting on the membrane wall.

The Drain Valve is only powered during Flush Mode.

NOTE: DO NOT unplug the power cord or turn off the system during Flush Mode. If there is a power outage or the system is unplugged, water will continue to be filtered but the system will NOT flush. This could cause the Ultra Filter to plug prematurely and may reduce the life of the filter.

⚠ Caution ⚠

Changing the flush interval can cause the Ultra Filter to plug prematurely and may reduce the life of the filter. Consult the factory for more information.

Manual Flushing

A manual flush can be activated at any time by pressing the **FLUSH** button on the Universal Pulse Controller.

When the **FLUSH** button is pressed, the Flush LED on the controller flashes and the Drain Valve opens for 10 seconds. After flushing is complete, the Drain Valve will close, the Flush LED will stop flashing and the unit will automatically return to Normal Operation Mode.

NOTE: A manual flush will not affect the interval flush setting.

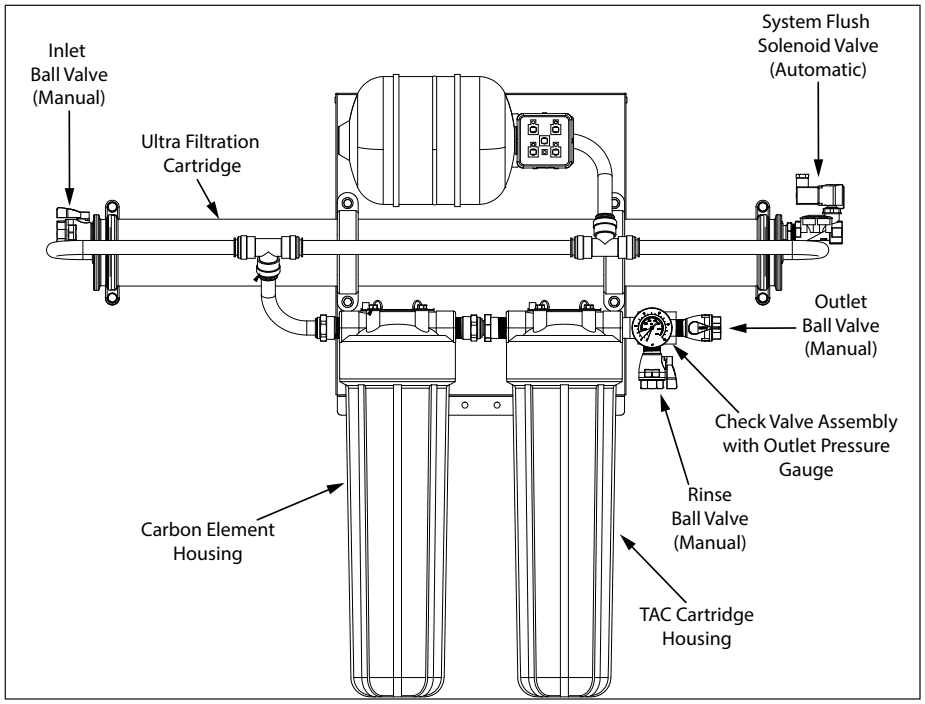

Figure 1. System Components Horizontal Units

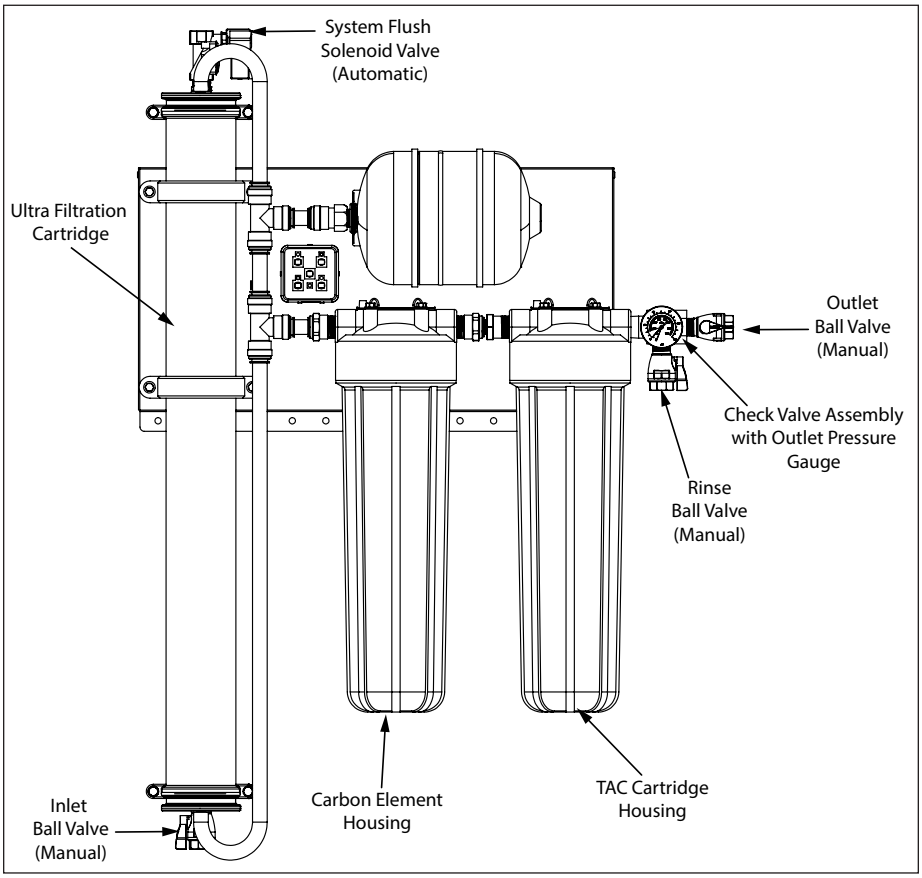

Figure 2. System Components Vertical Units

NOTE: Some units may not have the secondary TAC housing.

Unpacking

1. Open the large box. It should contain:

   A. Panel mounted VZN system with an Ultra Filter Cartridge installed.

   B. Padded envelope containing:

   - Power Adaptor
   - Owner's Manual
   - Mounting Bracket
   - Filter Wrench
   - Glove and Sticker Kit

   C. Carbon Element and Carbon Element Filter Bowl

   D. TAC Element and TAC Element Filter Bowl (T5 systems only)

2. Remove all packing materials and protective coverings from the system.

3. Remove the information packet. Fill out and mail the warranty card immediately to prevent any delay in obtaining warranty coverage.

NOTE: If any parts are damaged, contact Antunes IMMEDIATELY at +1-877-392-7854.

Equipment Setup

General

When placing the system into service, pay attention to the following guidelines:

- DO NOT immerse cord or power plug in water
- Keep cord away from heated surfaces.

Electrical

The line voltage must match the voltage on the specification label. The plug on the power cord must match the appropriate outlet. DO NOT connect the system to a switched electrical outlet.

Plumbing

NOTE: The system must be connected to the COLD water line. DO NOT connect the system to the hot water line.

The VZN system uses the following connections:

System Inlet	3/4" FNPT
System Outlet (Product Water)	3/4" FNPT
Drain	3/4" FNPT
Rinse Outlet	3/4" (Garden Hose or 3/4" FNPT)

When making a plumbing connection to the system, use a back-up wrench on the supporting plumbing. Always use a quality, approved pipe sealant or thread seal tape on pipe threads. DO NOT allow pipe sealant inside pipes.

DO NOT over tighten the connections. Use plastic fittings when connecting to the plastic connections of the system.

If soldered plumbing is used, DO NOT apply heat to, or near, the filtration system. Use union (O-Ring seal) connections for ease of installation and future servicing.

Suggested Tools and Supplies for Installation

The following tools and supplies are suggested to help with the installation:

- Screwdriver
- Drill with Bits
- Tape Measure
- Two Gallon Bucket
- Pipe Wrenches
- Fresh, Unscented Liquid Chlorine Bleach
- Adjustable Wrenches
- Level
- Pipe Dope or Thread Seal Tape
- Hose or pipe for drain line
- Garden Hose (for rinsing)

Installation

⚠ Caution ⚠

Due to its weight and size, the VZN system MUST be mounted with the provided Mounting Bracket. Read the Mounting the System section before attempting to mount the VZN system. Use care when lifting heavy objects.

Mounting the System

NOTE: Use caution when lifting and mounting the system. The system MUST be mounted using the provided Mounting Bracket.

The VZN system comes with a Mounting Bracket. When mounting the system, pay attention to the following guidelines:

- Allow sufficient access for cartridge replacement. VZN-521H or VZN-521HC systems should be mounted with 23 inches to the left or right of the system. VZN-541H or VZN-541HC systems should be mounted with 43 inches to the left or right of the system. VZN-541V or VZN-541VC systems should be mounted with 43 inches to the top or bottom of the system
- Mount the system near but NOT above an appropriate electrical outlet.
- Mount the system near a drain for flushing operations.
- Mount the system before all consumable water filtration processes.
- Secure the Mounting Bracket provided with the VZN system into wall studs with heavy duty hardware capable of supporting 120lbs. Or more (Mounting Hardware Not Supplied).
- Mount the VZN system to the Mounting Bracket and secure with heavy duty hardware (Mounting Hardware Not Supplied).

The system is pre-assembled to a Back Panel. The Back Panel has mounting holes across the bottom portion to secure the bottom of the system to the wall. Some of the bottom mounting holes may be obscured. Plan your mounting accordingly.

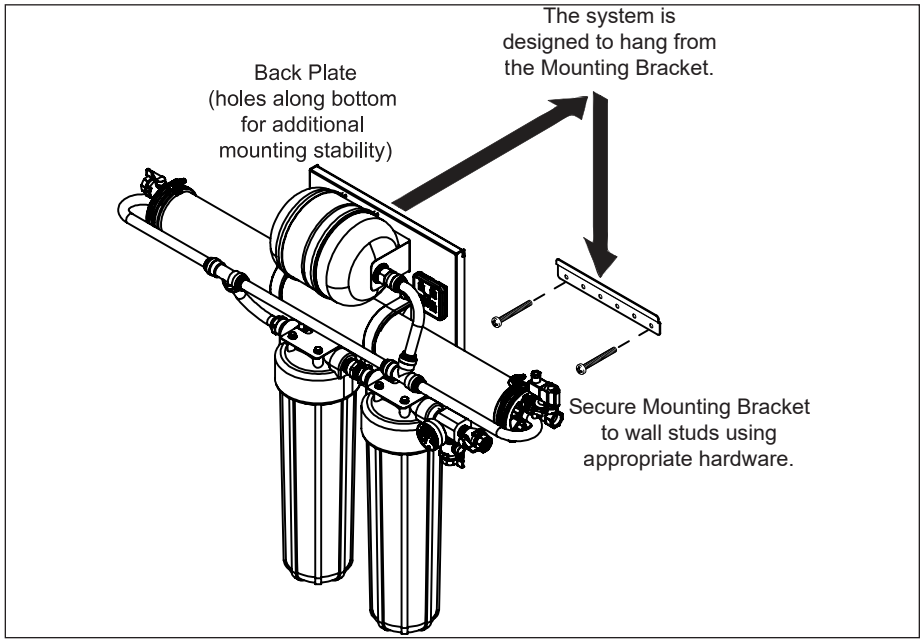

Figure 3. Mounting the System

Follow these steps to secure the Mounting Bracket to the wall and seat the VZN system:

1. Use a stud finder and level to attach the Mounting Bracket securely to the wall with the appropriate mounting hardware (Figure 3).
2. The Mounting Bracket is designed so that the VZN system can be lifted and hung on the Mounting Bracket. With assistance, lift the system and seat it onto the Mounting Bracket securely (Figure 3).
3. After mounting the VZN system to the Mounting Bracket, secure the VZN system to the wall using the mounting holes provided on the lower portion of the VZN system back panel.
4. Screw the Carbon Element Housing onto the Carbon Element Head without the Carbon Element installed.

NOTE: DO NOT install the Carbon Element at this time. The Carbon Element should only be installed after the Ultra Filter Cartridge has been rinsed.

5. Screw the TAC Housing onto the TAC Head without the TAC Cartridge installed. (T5 systems only)

NOTE: DO NOT install the TAC Cartridge at this time. The TAC Cartridge should only be installed after the Ultra Filter Cartridge has been rinsed.

Drain Valve Connection

The drain is for flushing particle buildup out of the system during self cleaning.

1. Cut a length of tubing (not supplied) so it reaches the drain from the Drain Valve.
2. Connect one end of the hose to the Drain Valve with an appropriate fitting (not supplied) (Figure 4).
3. Direct the other end of the hose to the drain (Figure 5). For hard plumbed drain lines the use of an O-Ring sealed union is recommended (not supplied).

When connecting the drain hose, pay attention to the following guidelines:

- The drain line plumbing must be able support the flow rate whenever the system flushes. This flow rate is dependent on the inlet water pressure, inlet pipe size, and system.
- The drain line leading out of the system must be as short as possible and slope downwards without any kinks or loops.
- The drain line plumbing must be positioned and secured at least 2 inches above the drain (Figure 5). This air gap protects the system from contamination in the event of a backed-up drain.
- The drain used must not be blocked or restricted.
- The drain used must be as large or larger than the drain line plumbing.

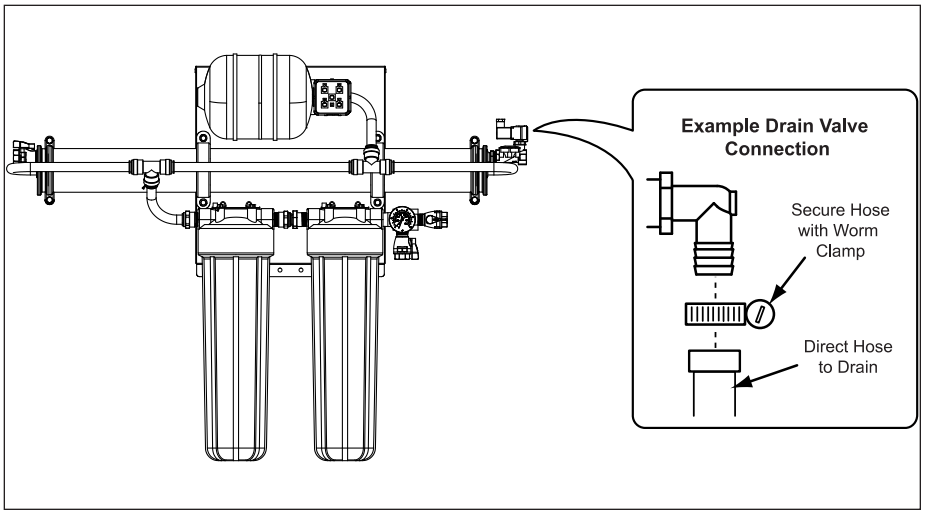

Figure 4. Drain Valve Connection

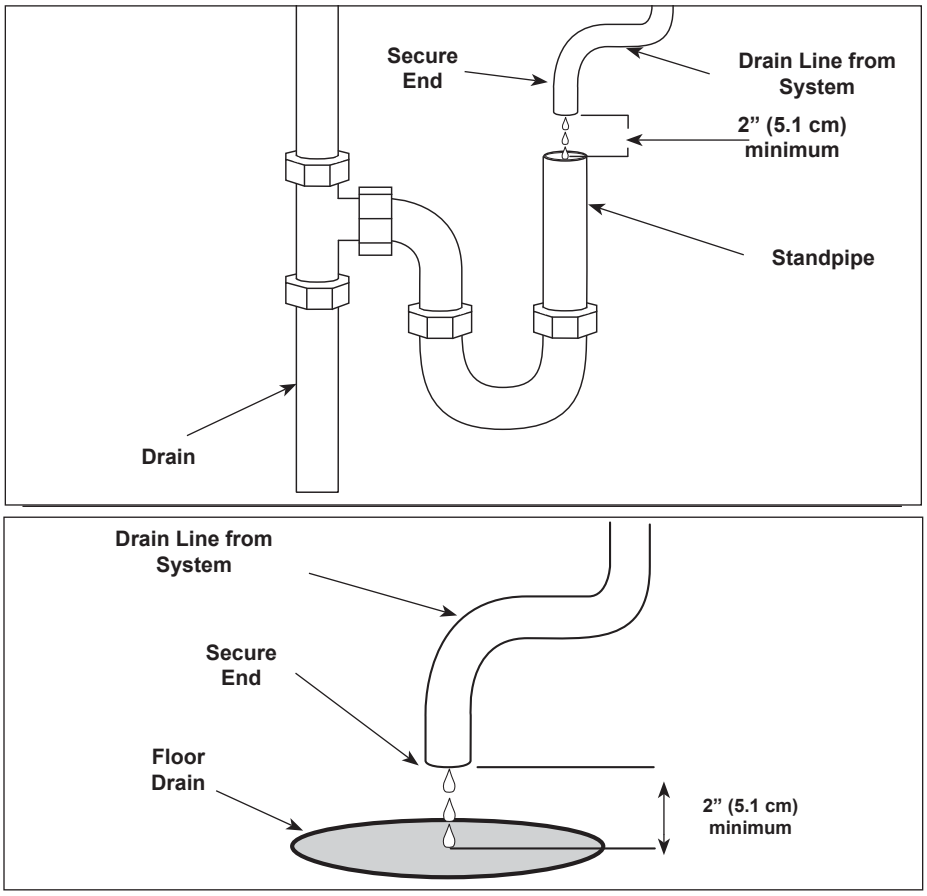

Figure 5. Drain Line Plumbing

Rinse Valve Connection

1. Obtain a length of 3/4” garden hose long enough to reach from the Rinse Valve to the drain.
2. Install a gasket in the end of the hose (non-drain end).
3. Connect the hose to the Rinse Valve fitting. Use a back-up wrench on the fitting if required (Figure 6).
4. Direct the other end of the hose to the drain. Secure as necessary.

NOTE: See specification page for flow accommodations.

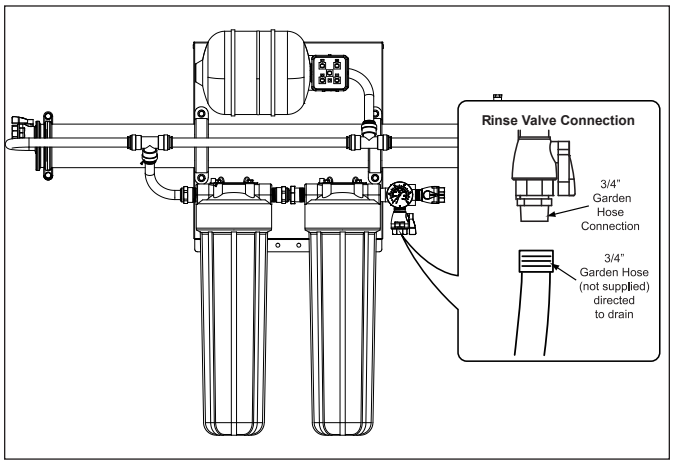

Figure 6. Rinse Valve Connection

⚠ Caution ⚠

DO NOT use the Rinse Valve for consumable water.

System Inlet Connection

The System Inlet has a 3/4” FNPT thread at the Inlet Valve (Figure 7). DO NOT overtighten fittings as this could cause the plastic ball valve to crack.

Use plastic fittings and a pipe thread sealant approved for use on PVC fittings when making connections.

Filtered Water Permeate Outlet Connection

The System Outlet has a 3/4” FNPT thread at the Outlet Valve (Figure 7). DO NOT overtighten fittings as this could cause the plastic ball valve to crack.

Use plastic fittings and a pipe thread sealant approved for use on PVC fittings when making connections.

Inlet Water Plumbing

Before connecting the fitting to the System Inlet, the plumbing to the system must be flushed clear of all debris. Hold a bucket at the inlet water line and slowly open the Inlet Water Valve. Allow the pipe to flush until all debris is removed.

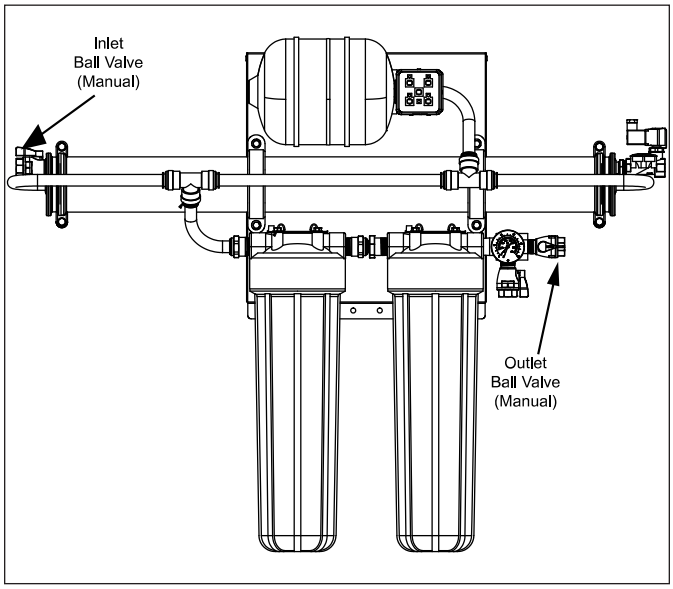

Figure 7. Inlet and Outlet Connections

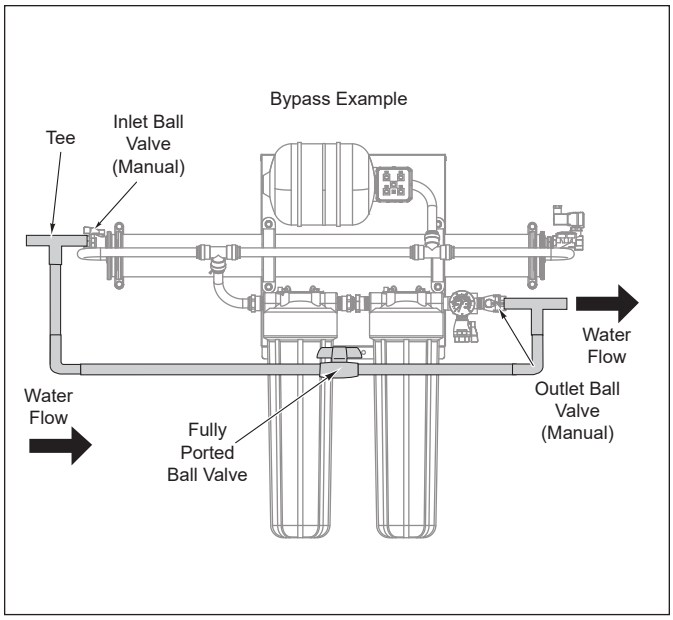

Figure 8. Install Bypass

Installing a Bypass

(Not Supplied)

It is recommended that an optional bypass be installed to help with replacing cartridges and servicing the system.

1. Install tees on the ends of the plumbing leading to the Inlet and Outlet Ball Valves.
2. Connect the two tees by installing plumbing and a fully ported (preferably 3/4") Ball Valve.
3. When the system is in use, open the Inlet and Outlet Ball Valves and close the Bypass Ball Valve.
4. When servicing is needed, close the Inlet and Outlet Ball Valves and open the Bypass Ball Valve.

Starting the Controller

1. Select the proper AC plug for your electrical outlet and install it onto the power supply.
2. Plug the appropriate end of the power cord into the controller.
3. Plug the other end of the power cord into the electrical outlet. The LEDs on the controller will light up.
4. The controller automatically enters Flush Mode and the Flush LED starts to flash.
5. When flushing is complete, the Flush LED will stop flashing and one or more LEDs will remain lit, indicating the unit has power and which interval is selected in the controller.

Rinsing the Ultra Filter Cartridge

The Ultra Filter Cartridge comes pre-installed in the VZN system. The Ultra Filter Cartridge must be rinsed before the system is used to remove any air and protective solution.

NOTE: Ultra Filter Cartridge must be rinsed <u>to drain</u> before use. Rinsing to drain removes storage solution and air. DO NOT rinse into carbon if present. Carbon life and/or performance may be affected.

NOTE: Make sure the Carbon Element and TAC Cartridge, if present, are NOT installed. These should only be installed after the Ultra Filter Cartridge has been rinsed.

NOTE: DO NOT consume water used during this process.

1. Direct water from the Rinse Ball Valve to a drain.
2. Close the Outlet Ball Valve.
3. Close the Inlet Ball Valve.
4. Open the Rinse Ball Valve.
5. Slowly turn on the water supply to the VZN system.
6. Slowly open the Inlet Ball Valve. Air and water will come out of the Rinse Ball Valve.
7. Press the **FLUSH** button. The Drain Valve will open and air and water will come out of the drain line. Repeat step 7 six times to ensure all air and storage solution are flushed out of the Ultra Filter Cartridge.
8. Continue to allow water to run at full flow out of the Rinse Ball Valve for at least 15 minutes.
9. After 15 minutes, close the Rinse Ball Valve and allow the system to sit for 15 minutes without any water flow to release any trapped air from the Ultra Filter Cartridge.
10. Inspect the unit for any leaks, repairing as needed.
11. After 15 minutes, open the Rinse Ball Valve and wait for 15 more minutes to flush out any remaining air.
12. Close the Rinse Ball Valve.
13. Press the **FLUSH** button to open the Drain Valve. Repeat step 13 six times to ensure any remaining air is flushed out of the system.
14. Open the closest downstream tap or faucet.
15. Slowly open the Outlet Ball Valve and allow water to run through the system and out the faucet for five minutes.

Sanitizing the System and Lines

The plumbing must be sanitized to eliminate possible contamination that may have occurred during the installation process.

One ounce (30 ml) of liquid chlorine bleach (regular bleach, unscented 5.25 % - 6 % sodium hypochlorite) or Kay-5 sanitizer solution (Sodium Dichloro-s-Triazinetrione Dihydrate, 6%) or equivalent can be used to sanitize the plumbing.

The Kay-5 sanitizer solution is made by dissolving a 1 oz. packet of Kay-5 powder in 2 oz. (60 ml) of clean warm water. This can be done by removing 1 inch from the top of the Kay-5 packet and adding the 2 oz. of warm water to the packet. Mix with a coffee stirrer to dissolve. When added to the system, this will create a 60-100 ppm chlorine solution.

NOTE: Follow the handling and safety instructions supplied with the sanitizer.

NOTE: If installed, remove the Carbon Element and TAC Cartridge from the system BEFORE Sanitizing.

NOTE: Sanitizing kit is NOT supplied.

1. Follow the steps in the ***Rinsing the Ultra Filter Cartridge*** in the Installation section of this manual.
2. Turn off the water to the system.
3. Open the faucet or tap closest downstream to the system.
4. Allow the system and plumbing to drain.
5. Allow the water to drain out of the system.
6. Pour the sanitizer into the inlet water line fitting using a cup or funnel. Be sure to wear protective gear and be careful not to spill the sanitizer onto clothing or skin.
7. Slowly turn on the water supply to the system.
8. Allow water to flow through the system and out of the open faucet or tap until the smell of sanitizer is present.
9. Close the faucet or tap.
10. Let the system stand without water flow for at least 15 minutes to allow the sanitizer to sanitize the pipes.
11. After 15 minutes without water flow, open the faucet or tap.
12. Allow water to flow through the system until the presence of sanitizer is gone.
13. Open all other faucets and taps in line with the system to flush any remaining sanitizer from the plumbing.
14. Close all faucets and taps.

Rinsing the Carbon Element and TAC Cartridge

The Carbon Element and TAC Cartridge MUST be rinsed before using the system the first time and immediately after the Carbon Element or TAC Cartridge have been replaced.

NOTE: Wear the supplied gloves for installation and handling of the Carbon element and TAC cartridge. If Installed, remove the TAC Cartridge Element before proceeding. DO NOT rinse a new Carbon Element with the TAC Cartridge Element installed.

1. Install the Carbon Element into the Carbon Element Housing.
2. Screw the Carbon Element Housing (containing the Carbon Element) into place on the Carbon Element Head. Use the Filter Wrench if necessary.
3. If installed, remove the TAC Cartridge Element from the TAC Cartridge Housing. Use the Filter Wrench if necessary.
4. Screw the empty TAC Housing into place on the TAC Head. Use the Filter Wrench if necessary.
5. Direct water from the Rinse Ball Valve to a drain. Then open the Rinse Ball Valve and close the Outlet Ball Valve.
6. Turn on the water to the system by slowly opening the Inlet Ball Valve.
7. Allow water to flow through the Carbon Element and TAC Housings to flush out trapped air and any debris that may be present.
8. For **VZN-521H-T5, VZN-541H-T5, and VZN-541V-T5::** Flush the Carbon Element for at least 5 minutes.

   For **VZN-521HC-T5, VZN-541HC-T5, and VZN-541VC-T5:** Flush the Carbon Element for at least 10 minutes
9. Close the inlet ball valve and install the TAC Cartridge Element into the TAC Housing with the arrow on the cartridge pointing up. Reattach the TAC Housing to the system. Open the inlet ball valve and flush for at least 5 minutes.

NOTE: DO NOT consume water used during this process.

10. Close the Rinse Ball Valve when rinsing completes.
11. Open the Outlet Ball Valve. The system is now ready for use.
12. **For new piping installations:** After making the connection to the System Outlet:
    - **A.** Open the faucet or tap closest to the filter system
    - **B.** Slowly open the Inlet Valve.
    - **C.** Allow the pipe to flush until all debris is removed.

Maintenance

Replacing the Ultra Filter Cartridge

NOTE: Always install new Carbon Element and new TAC Cartridge Element after replacing the Ultra Filter Cartridge.

NOTE: Water may drain from the tubing as it is removed. Make sure there is enough room around the system to remove the cartridge.

1. Turn off water to the system by closing the Inlet Ball Valve and Outlet Ball Valve.
2. Press the **FLUSH** button to flush the system and relieve system pressure. Repeat several times to ensure permeate tank is empty.
3. Remove the Carbon Element and remove the TAC Cartridge Element if present.
4. Remove either End Cap clamp hardware from the Ultra Filter Housing. (Figure 9)
5. Locate the permeate 180° bent tubing on the Ultra Filter Housing and disconnect the long end from the tee by pushing the collet squarely against the face of the fitting.
6. With the collet pushed in place on the tee fitting, pull the tubing from the tee fitting with your hand.
7. Remove the End Cap (Figure 9) from the Ultra Filter Housing.

NOTE: If the Cartridge does not easily come out of the Housing, remove the opposite End Cap for assistance.

8. Inspect the End Cap O-Rings and Cartridge O-rings for nicks or cuts. Replace as needed.
9. Record the serial number of the new cartridge. The cartridge serial number is engraved on one end of the outer tube (for example: 05K 12013).
10. Lubricate all O-rings with a food-grade silicone lubricant. Apply a light coating of lubricant to the inside center tube at both ends of the new cartridge.
11. Position the new cartridge into the housing and gently insert into the housing.
12. Ensure the cartridge is fully seated on the opposite end cap.
13. Press the End Cap into position until it is fully seated.
14. Install the Ultra Filter Housing clamp and hardware.

NOTE: Ensure all of the Ultra Filter Housing clamp hardware is properly secured.

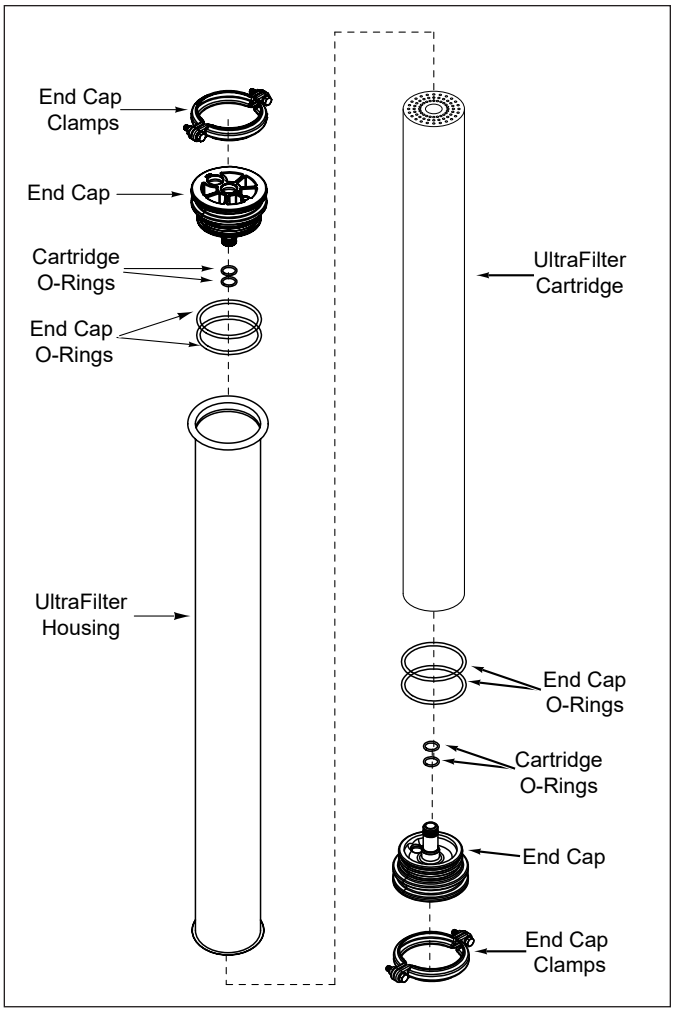

Figure 9. Replacing the Ultra Filter Cartridge

15. Reattach the tubing that was removed in steps 5 and 6.
16. Rinse the new Ultra Filter Cartridge before placing the system back into operation. Follow the Rinsing the Ultra Filter Cartridge, Sanitizing the System and Lines, and Rinsing the Carbon Element and TAC Cartridge procedures in the Installation section of this manual to complete the cartridge change.
17. When rinsing is complete, repressurize the system by opening the Outlet Ball Valve then opening the Inlet Ball Valve.

Rinsing and Replacing the Carbon Element

NOTE: Remove the TAC Cartridge Element, if present, and re-attach the TAC Housing before proceeding.

1. Turn off the water to the system by closing the Inlet Ball Valve and Outlet Ball Valve.
2. Open the Rinse Ball Valve and allow the system to drain to ensure the permeate tank is empty.
3. Remove the Carbon Element Housing (Figure 10).
4. Empty any water into a drain and discard the old Carbon Element.
5. Inspect the O-rings on the Carbon Element Housing (Figure 10). Replace the O-rings if it is cracked, twisted, or missing.
6. Lubricate the O-rings with an approved food grade lubricant and install into the Carbon Element Housing.
7. Install the new Carbon Elements into the Carbon Element Housing.

NOTE: Make sure the Gasket remains in place in the recessed grooves on both ends of the Carbon Element.

8. Screw the Carbon Element Housing (containing the Carbon Element) into place on the Carbon Element Head. Use the Filter Wrench if necessary.

NOTE: DO NOT overtighten the Carbon Element Housing.

9. Direct water from the Rinse Ball Valve to a drain.

NOTE: Direct the Rinse Ball Valve to a drain. DO NOT use the water resulting from the flush procedure.

10. Open the Rinse Ball Valve. Turn on the water to the system by slowly opening the Inlet Ball Valve. Allow water to flow through the Carbon Element and Housing. This clears out trapped air and any carbon fines.
11. For **VZN-521H-T5, VZN-541H-T5, and VZN-541V-T5:** Flush the Carbon Element for at least 5 minutes. For **VZN-521HC-T5, VZN-541HC-T5, and VZN-541VC-T5:** Flush the Carbon Element for at least 10 minutes.

NOTE: DO NOT consume the water used for rinsing the Carbon Element.

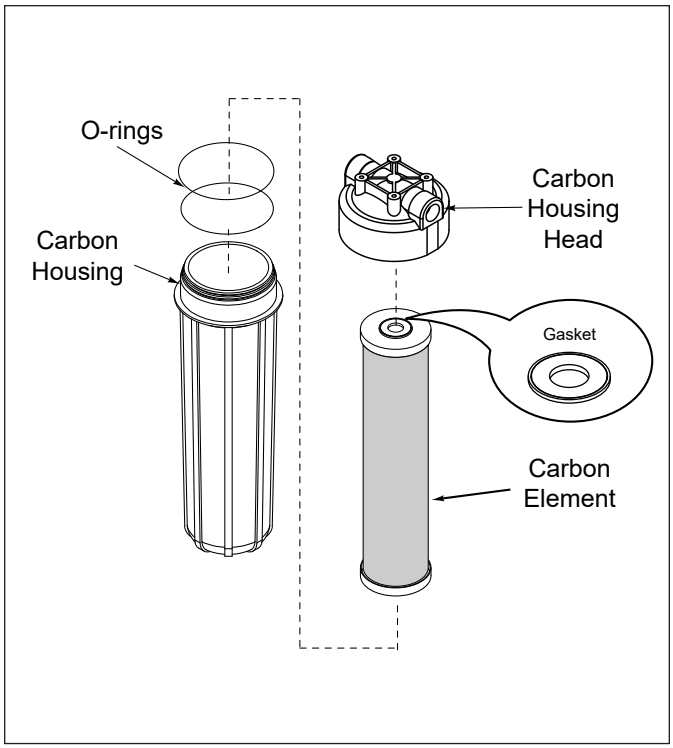

Figure 10. Carbon Element

12. Re-install the TAC Cartridge Element into the TAC Housing with the arrow on the cartridge pointing up. Reattach the TAC Housing to the system.
13. When the rinsing is complete, close the Rinse Ball Valve and open the Outlet Ball Valve.
14. The system is now ready for use.

Rinsing and Replacing the TAC Cartridge

1. Turn off water to the system by closing the Inlet Ball Valve and then close the Outlet Ball Valve.
2. Press the FLUSH button to initiate the flush cycle. Repeat several times to ensure the permeate tank is empty.
3. Remove the TAC Housing (Figure 11).
4. Empty any water into a drain and discard the old TAC Cartridge (Figure 12).
5. Inspect the O-rings on the TAC Housing. Replace the O-rings if cracked, twisted, or missing.
6. Lubricate the O-rings with an approved food grade lubricant and install into the TAC Housing.
7. Install the new TAC Cartridge into the TAC Housing with the arrow on the cartridge pointing up.

NOTE: Make sure the End Seal gasket is in place in the recessed groove on the top end of the TAC Cartridge (Figure 12).

8. Screw the TAC Housing (containing the TAC Cartridge) into place on the TAC Head. Use the Filter Wrench if necessary.
9. Direct water from the Rinse Ball Valve to drain.

NOTE: DO NOT consume the water used for rinsing the TAC Cartridge.

10. Turn on the water to the system by slowly opening the Inlet Ball Valve and allow water to flow through the TAC Cartridge and Housing to clear out trapped air and any fines that may be present.
11. Rinse the TAC Cartridge for at least 5 minutes.
12. When the TAC Cartridge rinsing is complete, close the Rinse Ball Valve and open the Outlet Ball Valve.
13. Reconnect the water to service. The system is now ready for use.

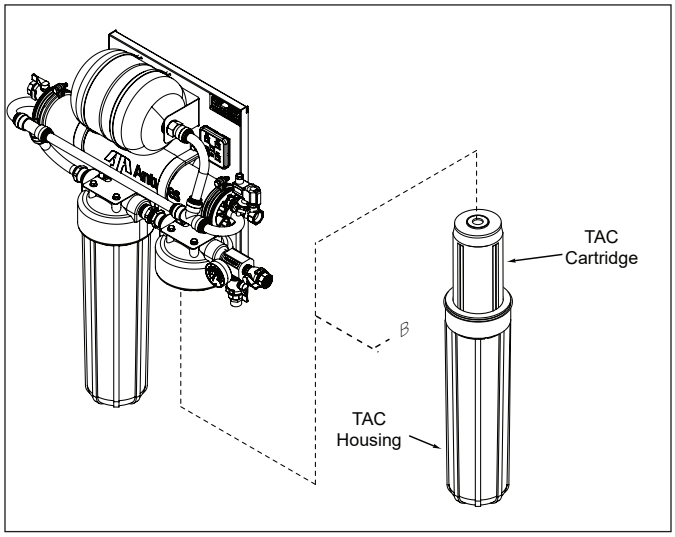

Figure 11. Removing the TAC Housing

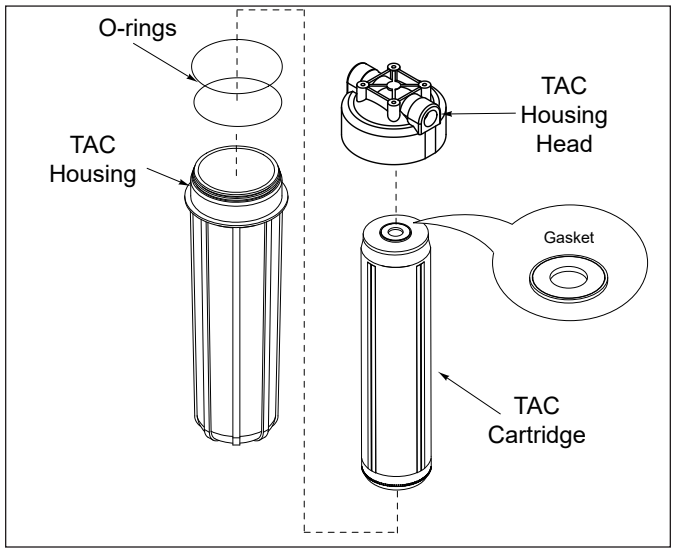

Figure 12. Replacing the TAC Cartridge

System Sanitization

The system and downstream plumbing should be sanitized every six months. When necessary, follow the procedure in ***Sanitizing the System and Lines*** in the Installation section of this manual.

Changing the Interval Setting

⚠ Caution ⚠

Changing the flush interval can cause the Ultra Filter to plug prematurely and may reduce the life of the filter. Consult the factory for more information.

Though not recommended, the interval setting on the Universal Pulse Controller can be changed. If the setting must be changed, use the chart below. Press and hold the corresponding button. After 5 seconds, the Button LED will turn on. After 10 seconds, the Flush LED will also turn on.

Flush Interval	Button	Hold Time	Button LED	Flush LED
15 minutes	A	10 seconds	On	On
30 minutes	B	10 seconds	On	On
45 minutes	C	10 seconds	On	On
1 hour	A	5 seconds	On	Off
4 hour	B	5 seconds	On	Off
6 hours	C	5 seconds	On	Off
12 hours	D	5 seconds	On	Off
24 hours	D	10 seconds	On	On

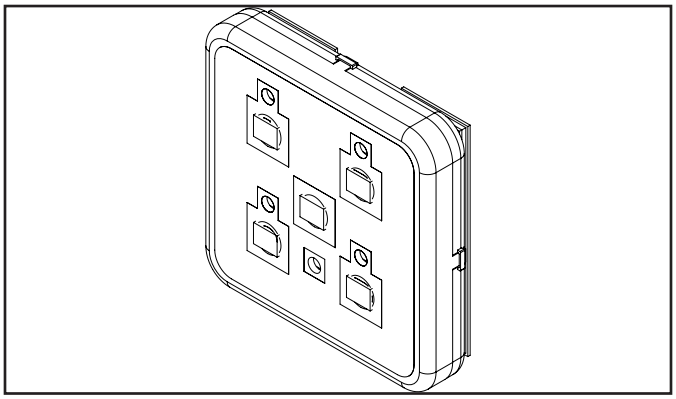

Figure 13. Universal Pulse Controller

Resetting the Timer Program

During the normal operation, the system will flush according to the set interval. It is possible the system will flush at a time of high water use. If this poses a problem, the controller can be reset. Unplug the power supply, wait for 5 seconds, and then plug the power supply in. When power is restored to the controller, it will automatically enter Flush Mode. The controller will then begin timing from the point when power is restored based on the interval setting selected.

Semi-Annual Task

Check Permeate Tank Air Pre-Charge

It is recommended the permeate tank air charge be checked every six months.

⚠ Caution ⚠

Air pre-charge should only be checked and adjusted under zero system pressure. The system must be depressurized before checking the tank pre-charge. DO NOT adjust the tank air pre-charge with the system under pressure.

⚠ Caution ⚠

Be careful when adding air to the tank. DO NOT add too much air pressure to the tank.

Tools and supplies required:

- Air Pressure Gauge, 5-40 psi range (0.3-2.7 bar) with tire valve (Schrader Valve) connection
- Source of compressed air (manual bicycle tire pump or air compressor)

1. Refer to Figure 1. Depressurize the system by closing the Inlet and Outlet Valves and opening the Rinse Valve. Make sure the Permeate Tank is fully drained.
2. Unscrew the protective cap from the air valve on the tank.
3. Use the pressure gauge to check the tank pre-charge for pressure.

NOTE: If any water comes out the air valve, the tank bladder has ruptured and the tank needs to be replaced.

4. The permeate tank should have a pressure of 28-31 PSI.
   - To add pressure to the permeate tank, use a manual bicycle tire pump or other source of compressed air.
   - To release pressure from the permeate tank, press the center pin on the air inlet valve.
5. Once the permeate tank is at 28-31 PSI, replace the protective cap on the air valve.
6. Pressurize system by closing the Rinse Valve and opening the Inlet and Outlet Valves.

Troubleshooting

Problem	Possible Cause	Corrective Action
Unit does not have power.	The power cord is not plugged into the appropriate outlet or control box.	Plug power cord into the appropriate outlet.
	The unit is plugged into a switched electrical outlet.	Plug the power cord into an unswitched outlet.
	Universal Pulse Controller is inoperable.	Contact your maintenance person or Authorized Service Agency.
	Transformer is defective.	
No water comes out of the filter system.	Inlet/Outlet Ball Valves closed.	Open the Inlet/Outlet Ball Valves.
	System depressurized.	Pressurize system.
	Drain Valve is stuck open.	Clean, rebuild, and/or replace the Drain Valve.
	Rinse Ball Valve is open.	Close the Rinse Ball Valve.
	The system may be in a flush cycle.	Wait for the flush cycle to end.
	Inlet Strainer (if installed) is plugged.	Clean or replace Inlet Strainer
	Ultra Filter Cartridge is plugged.	Replace Ultra Filter Cartridge.
	Carbon Element is plugged.	Replace Carbon Element.
Low water flow comes out of the filter system.	See above.	See above.
	The inlet water pressure is too low.	Boost the inlet water pressure.
	The outlet check valve may be plugged or defective.	Clean or replace the outlet check valve assembly.
	The inlet flow restrictor may be plugged.	Clean or replace the inlet flow restrictor.
Water tastes bad.	Carbon Element need replacing.	Replace Carbon Element.
	Storage/shipping solution not completely rinsed out of the system.	Rinse the system for a longer period of time; replace Carbon Element.
	Biological growth in pipes.	Sanitize plumbing.
	Water condition changed.	Consider installing additional filtration.
	Broken capillaries in Ultra Filter Cartridge.	Replace Ultra Filter Cartridge.
Flush runs continuously.	Drain Valve stuck open.	Clean, rebuild, or replace the Drain Valve.
	Controller sending continuous signals to valve.	Replace the controller.
Water splashes at drain during flush.	Drain line not positioned properly.	Reposition the end of the drain line.
	Drain not capable of handling high flow rate.	Clean drain; find alternate drain.
Water leaks at ends of the Ultra Filter cartridge after changing cartridge.	O-rings are not lubricated.	Lubricate O-rings with food grade lubricant.
	O-rings are split, cut, or twisted.	Replace O-rings.
	Ultra Filter Housing clamps and hardware not properly secured	Tighten Ultra Filter Housing Clamps or replace.
Water leaks from Carbon or TAC bowls.	O-rings are not lubricated.	Lubricate O-rings with food grade lubricant.
	O-rings are split, cut, or twisted.	Replace O-rings.
Water leaks from system fitting or connection.	Fitting broken or loose.	Tighten or replace the fitting.
	Not enough pipe thread sealant used.	Redo the fitting with the proper amount of sealant.

521H, 521HC, 541H, 541HC Replacement Parts

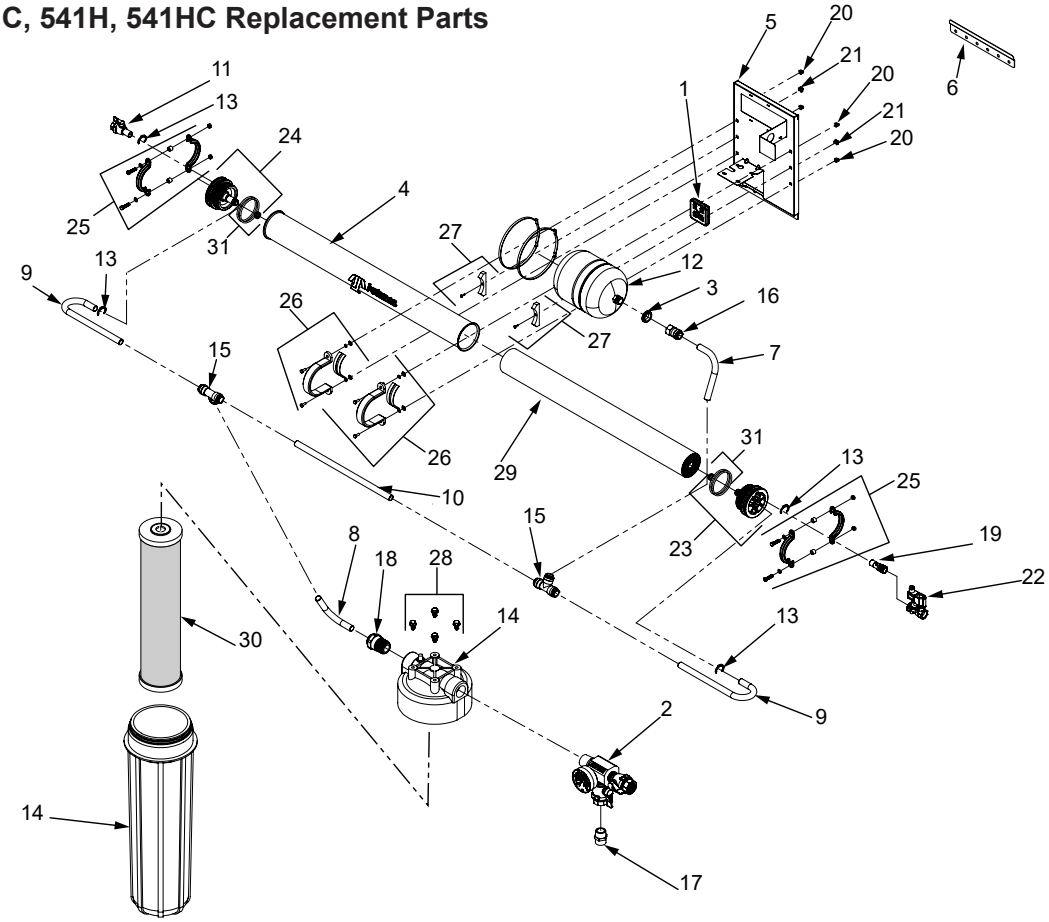

Item No.	Part #	Description	Qty.
1	7001576	Universal Pulse Controller Assembly	1
2	0012467	Outlet Assembly	1
3	0400381	Grommet, 1.75 OD X 1.1887 ID	1
4	0508910	Housing, 4 DIA X 20"L, (9710106, 9710107, 9710128 ONLY)	1
	0508919	Housing, 4" DIA X 40"L (9710119 & 9710120 ONLY)	1
5	0504723	Panel, Back plate	1
6	0505871	Mounting Bracket	1
7	2010199	Tubing, Bent 90°	1
8	2010202	Tubing, Bent 90°	1
9	2010247	Tubing, PEX-B, 180° (9710106, 9710107, 9710128 ONLY)	2
	2010245	Tubing, PEX-B, 180° (9710119 & 9710120 ONLY)	2
10	2010246	Tubing, PEX-B, 3/4" CTS, 19.72"	1
11	2170173	Valve, Ball 3/4" CTS X 3/4" FPT	1
12	2180215	Tank Expansion, 2.1 Gallon	1
13	2190304	Collet Clip	4
14	2180573	Filter Assembly, White, 20"	1
15	2180155	Union Tee, 3/4" CTS	2
16	2190158	Female Connector, 3/4" CTS X 3/4" NPS	1
17	2190167	Garden Hose Adaptor	1

Item No.	Part #	Description	Qty.
18	2190210	Adaptor, Tube to 1" NPT	1
19	2190210	Fitting, 3/4" NPT X 3/4" CTS Stem	1
20	3000116	Retainer Nut, 1/4"-20	4
21	3000132	Cage Nut, 8-32	2
22	4040189	Solenoid Valve 24VDC, 3/4" NPT	1
23	7002014	End cap Kit, SS Drain	1
24	7002025	End Cap Kit, SS Inlet, w/ Regulator 8GPM (9710106, 9710107, 9710128 ONLY)	1
	7002024	End Cap Kit, SS Inlet, w/ Regulator 15GPM (9710119 & 9710120 ONLY)	1
25	7002015	Clamp Kit, 4" SS UF Housing	2
26	7002016	Clamp Kit, UFL Housing	2
27	7002017	Rubber Cradle Kit, SS Housing	2
28	331P119	Screw, 5/16-12 x 1/2, SS HXWH	1
29	7001917	L-420 Cartridge (9710106, 9710107, 9710128 ONLY)	1
	7001916	L-440 Cartridge (9710119 & 9710120 ONLY)	1
30	7001909	C-420 Carbon Filter Kit (9710106, 9710107, 9710128 ONLY)	1
	7001910	CC-420 Carbon Filter Kit (9710107 & 9710120 ONLY)	1
31	7001914	O-Ring Kit, End Cap	2

VZN-521H-T5, VZN-521HC-T5, VZN 541H-T5, AND VZN-541HC-T5 SYSTEMS

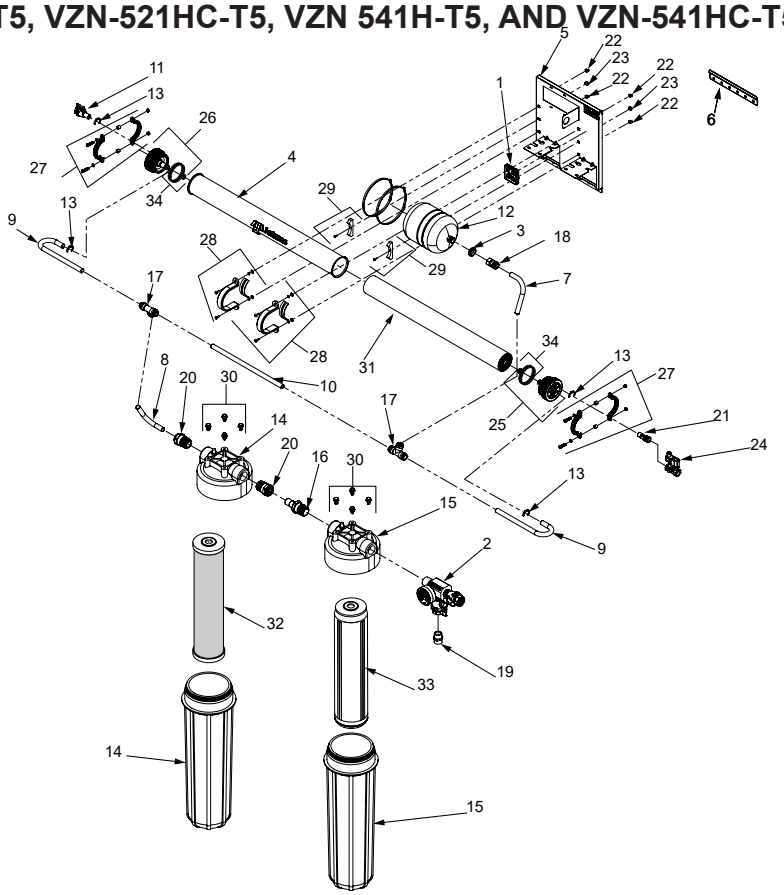

Item No.	Part #	Description	Qty.
1	7001576	Universal Pulse Controller Assembly	1
2	0012467	Outlet Assembly	1
3	0400381	Grommet, 1.75 OD X 1.1887 ID	1
4	0508910	Housing, 4 DIA X 20"L, (9710104 & 9710105 ONLY)	1
	0508919	Housing, 4 DIA X 40"L (9710117 & 9710118 ONLY)	1
5	0509325	Panel, Back plate	1
6	0505871	Mounting Bracket	1
7	2010199	Tubing, Bent 90°	1
8	2010202	Tubing, Bent 90°	1
9	2010247	Tubing, PEX-B, 180° (9710104 & 9710105 ONLY)	2
	2010245	Tubing, PEX-B, 180° (9710117 & 9710118 ONLY)	2
10	2010246	Tubing, PEX-B, 3/4" CTS, 19.72"	1
11	2170173	Valve, Ball, 3/4" CTS X 3/4" FPT, Black	1
12	2180215	Tank, 2.1 Gallon with 3/4" NPT	1
13	2190304	Collet Clip	4
14	2180573	Filter Assembly, White, 20"	1
15	2180574	Filter Assembly, Blue, 20"	1
16	2190154	1" NPT Male Stem	1
17	2190155	Union Tee, 3/4" CTS	2
18	2190158	Female Connector, 3/4" CTS X 3/4"NPS	1

Item No.	Part #	Description	Qty.
19	2190167	Garden Hose adaptor, 3/4" NPT x 3/4"	1
20	2190189	Adaptor, Tube to 1" NPT	2
21	2190210	Fitting, 3/4" MPT X 3/4" CTS Stem, JG	1
22	3000116	Retainer Nut- 1/4"-20	4
23	3000132	Cage Nut, 8-32	2
24	4040189	Solenoid Valve NC, 24VDC, 3/4" NPT	1
25	7002014	End cap Kit, SS Drain	1
26	7002025	End Cap Kit, SS Inlet, w/ Regulator 8GPM (9710104 & 9710105 ONLY)	1
	7002024	End Cap Kit, SS Inlet, w/ Regulator 15GPM (9710117 & 9710118 ONLY)	1
27	7002015	Clamp Kit, 4" SS UF Housing	2
28	7002016	Clamp Kit, UFL Housing	2
29	7002017	Rubber Cradle Kit, SS Housing	2
30	331P119	Screw, 5/16-12 x 1/2, SS HXWH	2
31	7001917	L-420 Cartridge (9710104 & 9710105 ONLY)	1
	7001916	L-440 Cartridge (9710117 & 9710118 ONLY)	1
32	7001909	C-420 Carbon Filter Kit (9710104 & 9710117 ONLY)	1
	7001910	CC-420 Carbon Filter Kit (9710105 & 9710118 ONLY)	1
33	7001912	TAC Filter Kit	1
34	7001914	O-Ring Kit, End Cap	2

VZN-541V, VZN-541VC & VZN-541VE SYSTEMS

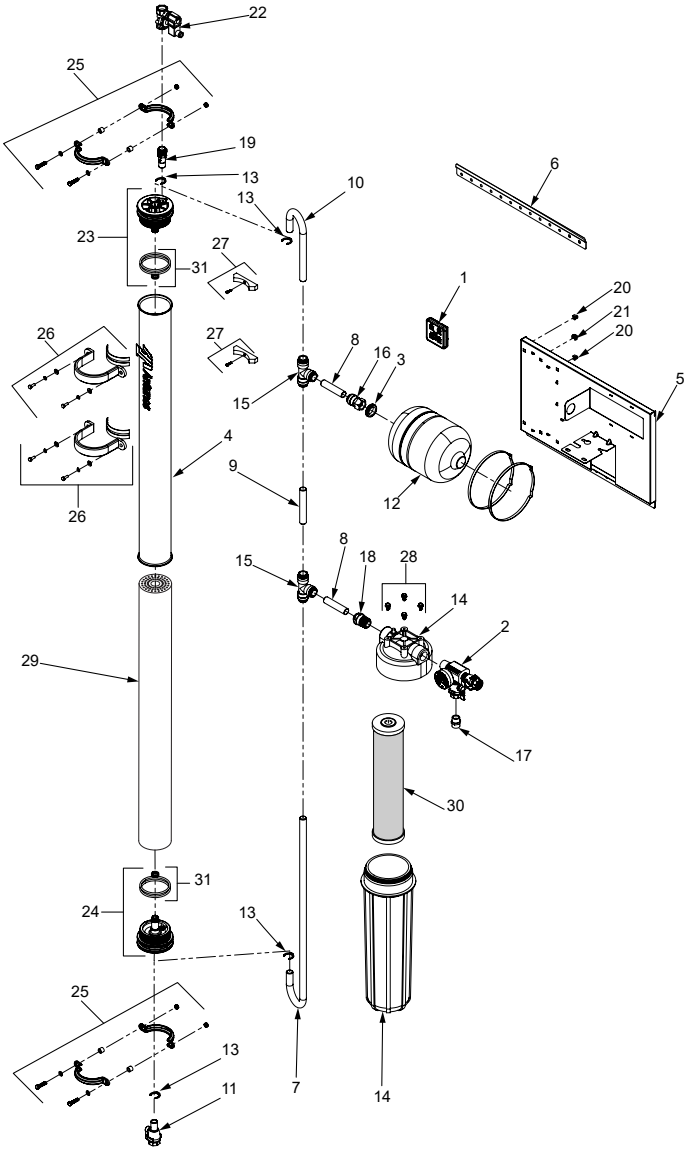

Item No.	Part #	Description	Qty.
1	7001576	Universal Pulse Controller	1
2	0012467	Outlet Assembly 3/4"	1
3	0400381	Grommet, 1.75OD X 1.187 ID	1
4	0508919	Housing 4" DIA x 40" L	1
5	0509332	Back Plate, VZN-541	1
6	0505871	Mounting Bracket	1
7	2010243	Tubing UF-Bend 180°, 31.21 LG	1
8	2010244	Tubing, Cut 3.85"	2
9	2010248	Tubing, Pex-B, 3/4" CTS, 5.587" Straight"	1
10	2010249	Tubing, Pex-B, 3/4" CTS, 180°, 4.53" X 9.41"	1
11	2170173	Valve, Ball, 3/4" CTS X 3/4" FPT, Black, Plastic	1
12	2180215	Tank, 2.1 Gallon with 3/4" NPT"	1
13	2190304	Collet Clip	4
14	2180573	Filter Bowl, White, 20"	1
15	2190155	Union Tee, 3/4" CTS	2
16	2190158	Female Connector, 3/4" CTS X 3/4" NPS"	1
17	2190167	Garden Hose adaptor, 3/4" NPT x 3/4" GHT	1
18	2190189	Adaptor, Tube to 1" NPT	1
19	2190210	Fitting, 3/4" MPT X 3/4" CTS Stem, JG	1
20	3000116	Retainer Nut- 1/4"-20	4
21	3000132	Cage Nut, 8-32, ZP STEEL	2
22	4040189	Solenoid Valve NC, 24VDC, 3/4" NPT	1
23	7002014	End cap Kit, SS Drain	1
24	7002024	End Cap Kit, SS Inlet, w/ Regulator 15GPM (9710113, 9710114, 9710132 ONLY)	1
	7002025	End Cap Kit, SS Inlet, w/ Regulator 8GPM (971011 ONLY)	1
25	7002015	Clamp Kit, 4" SS UF Housing	2
26	7002016	Clamp Kit - UFL Housing	2
27	7002017	Rubber Cradle Kit, SS Housing	2
28	331P119	Screw, 5/16-12 x 1/2, SS HXWH, Type B	1
29	7001916	L-440 Cartridge	1
30	7001909	C-420 Carbon Filter Kit (9710113 & 9710132 ONLY)	1
	7001910	CC-420 Carbon Filter Kit (9710114 ONLY)	1
	7001911	High Cap Carbon Filter Kit (971011 ONLY)	1
31	7001914	O-Ring Kit, End Cap	2

VZN-541V-T5 AND VZN-541VC-T5 SYSTEMS

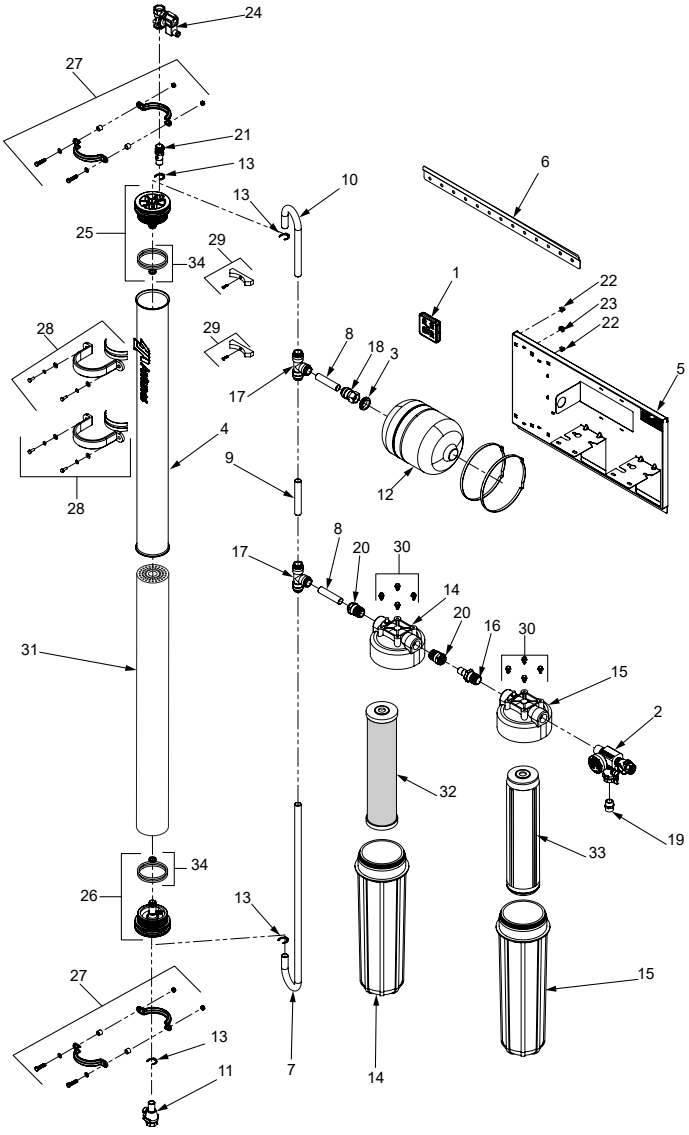

Item No.	Part #	Description	Qty.
1	7001576	Universal Pulse Controller	1
2	0012467	Outlet Assembly 3/4"	1
3	0400381	Grommet, 1.75OD X 1.187 ID	1
4	0508919	Housing 4 DIA x 40" L	1
5	0509344	Back Plate, VZN 521/541 -T5	1
6	0505871	Mounting Bracket	1
7	2010243	Tubing, UF-Bend 180°, 31.21 LG	1
8	2010244	Tubing, Cut 3.85"	2
9	2010248	Tubing, Pex-B, 3/4" CTS, 5.587" Straight"	1
10	2010249	Tubing, Pex-B, 3/4" CTS, 180°, 4.53" X 9.41"	1
11	2170173	Valve, Ball, 3/4" CTS X 3/4" FPT, Black, Plastic	1
12	2180215	Tank, 2.1 Gallon with 3/4" NPT	1
13	2190304	Collet Clip	4
14	2180573	Filter Bowl, White, 20"	1
15	2180574	Filter Bowl, Blue, 20"	1
16	2190154	1" NPT MALE STEM	1
17	2190155	Union Tee, 3/4" CTS	2
18	2190158	Female Connector, 3/4" CTS X 3/4" NPS	1
19	2190167	Garden Hose adaptor, 3/4" NPT x 3/4" GHT	1
20	2190189	Adaptor, Tube to 1" NPT	2
21	2190210	Fitting, 3/4" MPT X 3/4" CTS Stem, JG	1
22	3000116	Retainer Nut- 1/4"-20	4
23	3000132	Cage Nut, 8-32, ZP STEEL	2
24	4040189	Solenoid Valve NC, 24VDC, 3/4" NPT	1
25	7002014	End Cap Kit, SS Drain	1
26	7002024	End Cap Kit, SS Inlet, w/ Regulator 15GPM	1
27	7002015	Clamp Kit, 4" SS UF Housing	2
28	7002016	Clamp Kit - UFL Housing	2
29	7002017	Rubber Cradle Kit, SS Housing	2
30	331P119	Screw, 5/16-12 x 1/2, SS HXWH, Type B	2
31	7001916	L-440 Cartridge	1
32	7001909	C-420 Carbon Filter Kit (9710115 ONLY)	1
	7001910	CC-420 Carbon Filter Kit (9710116 ONLY)	1
33	7001912	TAC Filter Kit	1
34	7001914	O-Ring Kit, End Cap	2

Notes

Limited Warranty

Equipment manufactured by Antunes) has been constructed of the finest materials available and manufactured to high quality standards. These units are warranted to be free from defects in materials and workmanship for a period of one year from date of purchase under normal use and service, and when installed in accordance with manufacturer's recommendations*. The ultra filtration membrane cartridge is warranted under the same terms and conditions on a prorated basis for 36 months from date of purchase.

*To ensure continued proper operation of the units, follow the maintenance procedure outlined in the Owner's Manual.

1. This warranty does not cover failures due to improper system installation, defects caused by improper storage or handling prior to placing of the equipment into service. This warranty does not include overtime charges or work done by unauthorized service agencies or personnel. This warranty does not cover normal maintenance, calibration, or regular adjustments as specified in operating and maintenance instructions of this manual, and/or labor involved in moving adjacent objects to gain access to the Equipment.
2. Antunes reserves the right to make changes in design or add any improvements on any product. The right is always reserved to modify equipment because of factors beyond our control and government regulations. Changes to update equipment DO NOT constitute a warranty charge.
3. **If shipment is damaged in transit, the purchaser should make a claim directly upon the carrier. Careful inspection should be made of the shipment as soon as it arrives and visible damage should be noted upon the carrier's documentation. Damage should be reported to the carrier. This damage is not covered under this warranty.**
4. THIS WARRANTY IS EXCLUSIVE AND IS IN LIEU OF ALL OTHER WARRANTIES, EXPRESSED OR IMPLIED, INCLUDING ANY IMPLIED WARRANTY OR MERCHANTABILITY OR FITNESS FOR A PARTICULAR PURPOSE, EACH OF WHICH IS HEREBY EXPRESSLY DISCLAIMED. THE REMEDIES DESCRIBED ABOVE ARE EXCLUSIVE AND IN NO EVENT SHALL ANTUNES BE LIABLE FOR SPECIAL CONSEQUENTIAL OR INCIDENTAL DAMAGES FOR THE BREACH OR DELAY IN PERFORMANCE OF THIS WARRANTY.
5. Prices and specifications are subject to change without notice.

Antunes
EXPECT SUCCESS

Corporate Headquarters
180 Kehoe Blvd.
Carol Stream, IL 60188, USA
Phone: +1 (630) 784-1000
Toll Free: +1 (800) 253-2991
Fax: +1 (630) 784-1650

China Facility
2# Building North, 89 Songshan Rd.
Shishan Industrial Complex Park
New District, Suzhou, China
Phone: +86 512-6841-3637
Fax: +86 512-6841-3907

India Facility
Antunes NADI Manufacturing
India Pvt. Ltd.
57-58 Thattankulam Road,
Madhavaram
Chennai, India 600060